ISSN 2077-1304. Met. lit'e Ukr., vol. 31, 2023, № 1 (332), 41-49

https://doi.org/10.15407/steelcast2023.01.041

UDC 621.78: 620.178.16

V.V. Pashynskyi, Dr. Sci. (Engin.), Associate Professor, Head of Department, e-mail: v.v.pashinskiy@mipolytech.education, https://orcid.org/0000-0003-0118-4748, Web of Science ResearcherID: AAW-3826-2020

O.H. Pashynska, Dr. Sci. (Engin.), Senior Research Scientist, Professor of Department, e-mail: E.G.Pashinskaya@mipolytech.education, https://orcid.org/0000-0001-7102-1544, Web of Science ResearcherID: AAE-5739-2021

I.O. Boyko, PhD (Engin.), Associate Professor of Department, e-mail: igor.boyko@mipolytech.education, https://orcid.org/0000-0001-7742-4694

Technical University "Metinvest Polytechnica" (Zaporizhzhia, Ukraine)

Influence of heat treatment on the structure and wear resistance at abrasive wearing of high-carbon chromonickel steel of 150H15N5VM type

The article is devoted to the improvement of heat treatment regimes of steel 150H15N5VM type to ensure the necessary operational characteristics of the tool. The wear resistance of the alloys during abrasive wear was studied by the method of friction against a fixed abrasive. Formation of different structural states was performed by annealing of cast steel at temperatures of 550–900 °C, as well as quenching from temperatures of 950–1100 °C, followed by tempering in the range of 550–850 °C. The structure of the steel was studied by optical metallography and the morphology of the wear surfaces – by scanning electron microscopy.

As a result of research, it was established that high-chromium steel with nickel addition in the cast state has increased stability of retained austenite. To obtain maximum hardness, cast steel should be heated in the temperature range of 740 … 790 °C for 2 … 4 hours. As a result of annealing and following quenching with tempering, two variants of the structural state with increased wear resistance are formed – martensite and retained austenite immediately after tempering and the products of tempering of martensite and decay of retained austenite at high tempering. Wear resistance increases with increasing of quenching temperature. The main mechanism of wear is microcutting of the surface by hard abrasive particles. The drop in wear resistance at tempering temperatures of 550–650 °C is a consequence of a decrease in hardness and is accompanied by changes in the micromechanism of the wear surface destruction – the appearance of local centers of destruction. A significant increase in wear resistance with a further increase in tempering temperature, especially at small specific loads, can be explained by the formation of special carbides of alloying elements in the matrix.

Keywords: *abrasive wear, high-carbon chromium-nickel steel, annealing, quenching, tempering, wear resistance, specific load, special carbides.*

Introduction. Quality and reliability characteristics are the main requirements for wear-resistant parts, for the manufacturing of which cast wear-resistant alloys retain a dominant role. Simultaneously with the growing demand for such alloys, increased requirements for physical and mechanical properties, dimensional accuracy, durability and other quality indicators are applied [1, 2].

According to [3–5], abrasive wear is one of the most common types of surface degradation of materials in the conditions of hydraulic mining, hydraulic transportation and beneficiation of coal, and the operation of equipment in the mining, cement, and energy industries. Abrasion-resistant material must have certain mechanical and technological properties, and in some cases, erosion and corrosion resistance. The ability of the material to resist wear is a structure-sensitive characteristic and depends on the structure, which is determined by the chemical composition and heat treatment [6–7]. The structural features of material's resistant to abrasive environments include, first of all, the necessity to obtain a heterogeneous structure consisting of hard inclusions located in a tough base (matrix) that has sufficient damping characteristics [8–11]. An important factor that determines the material's resistance to wear is the nature of the connection of individual components of microstructure. Hard inclusions are firmly held by the matrix only if the type and dimension parameters of their crystal lattices are close. Therefore, research to identify the features of the formation of the structure of wear-resistant alloys during heat treatment is of great importance.

Formulation of the problem. High-chromium high-carbon steels are widely used for the production of wear-resistant parts. To improve their operational properties, they are subjected to a special heat treatment, which consists in quenching followed by tempering.

Since nickel, when introduced into steel, increases its hardenability, toughness, as well as the stability of austenite, it can be assumed that its addition to high-chromium high-carbon steel will provide the improvement in

the complex of product properties, primarily due to an increase in the toughness of the matrix alloy. An increase in the energy dissipation during wearing can be achieved by the formation of a structurally unstable state in the matrix (steels with metastable austenite) or the formation of austenite with a high capacity for strengthening during shock-abrasive wear (as occurs in high-manganese steels such as Hadfield steel). A debatable issue is the possibility of using the effect of deformation martensite formation in the process of predominantly abrasive wear, when the specific value of mechanical energy applied to the wear surface is relatively small [12–15].

Taken into account the lack of information on such effect of nickel on the properties of tool steels, it is necessary to study its effect on the processes of structural transformations in steels. The purpose of this work is to study the influence of heat treatment parameters (time and temperature) of steel 150H15N5VM type on its structure and properties to improve the heat treatment regime of steel to ensure the necessary operational characteristics of the tool.

Investigation material and methodology. Cast steel 50H15N5VM (1.46...1.54 % C, 14.5...15.5 % Cr, 4.6...5.4 % Ni, 0.4...0.8 % Mo and W) was taken as an object of research. The diameter of the cast ingot was 300 mm. For investigation, samples with a diameter of 20 mm and a height of 30 mm were cut out by the method of electroerosion processing. Then the samples were heated to temperatures of 550, 650, 750, 790, 830, 900 °C and for one, two, and four hours in electric resistance furnaces of the SNOL type. At the second stage of research, the same steel was subjected to heat treatment in the state after previous high-temperature annealing at 1100 °C. To form a different structural state, quenching was carried out with heating temperatures of 950, 1025, 1100 °C with cooling in oil followed by tempering at temperatures of 550, 650, 750 and 850 °C.

The microstructure was studied using a Neophot 21 microscope at magnifications of × 100, × 200, × 500, × 1000. Pictures were taken with a digital camera with a resolution of 5 MP, and the digital image was processed using the ScopePhoto software. Morphology of the wear surfaces were investigated with using of scanning microscopy technique in backscatteres electrone image mode. Hardness was measured by the Rockwell method on a TK-2 device, microhardness was measured on a PMT-3 microhardness tester with a load of 0.5 N. The wear resistance of alloys during abrasive wear was investigated by the method of friction against a fixed abrasive using the "pin-shaft" kinematic scheme at specific loads of 3.66 N/cm^2, 7.3 N/cm^2, 14.5 N/cm^2. The scheme of the installation for tests on abrasive wear is shown in Fig. 1.

A vertical cylindrical sample (*2*) of the tested material is brought into contact with the abrasive material (*5*) mounted on a horizontal shaft (*1*), which rotates at a constant angular velocity, through the contact surface (*4*).

The sample (*2*) is fixed on the loading head (*6*), the elastic fastening of which ensures the adaptation of the sample (*2*) in relation to the abrasive surface (*5*) of the shaft (*1*), which ensures the stability of the nominal

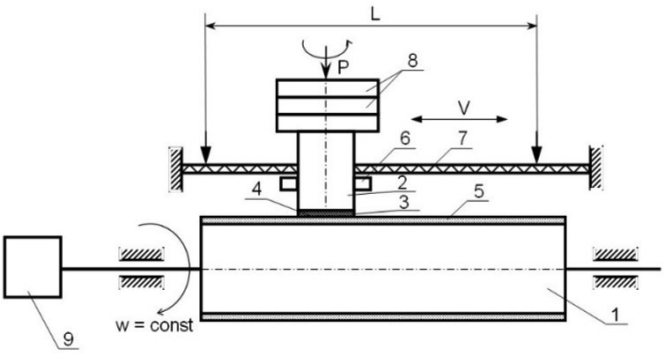

Fig. 1. Scheme of the installation for tests on abrasive wear

contact area of the sample. The device (*7*) ensures the movement of the sample parallel to the longitudinal axis of the shaft (*1*). Axial normal load is provided by loads *8*.

The quantitative characteristic of the wear resistance of each sample was determined from the ratio:

$$I_m = L_f/m, \quad (1)$$

where I_m – is the mass wear resistance, L_f – is the length of the friction path during tests, m – is the decrease in the mass of the sample during friction along the L_f path.

For the convenience of the analysis, the relative wear resistance $\psi_{i,0}$ was also determined by the formula:

$$\psi_{i,0} = \frac{I_m^i - I_m^0}{I_m^0}.100\ , \%, \quad (2)$$

where I_m^i – is the wear resistance of the tested sample, I_m^0 – is the wear resistance of the reference sample, as the sample after homogenizing (high-temperature) annealing was used.

Obtained results and discussion. In the cast state, steel 150H15N5VM has a structure formed by an austenitic matrix with eutectic carbides. A typical microstructure is shown in Fig. 2.

When cast steel samples are heated to temperatures of 550...650 °C and held for 1...2 hours, no visible structural changes occur, the austenite matrix remains stable.

Noticeable changes in the structure are observed when the heating temperature is increased to 750...790 °C. The main process is the transformation of

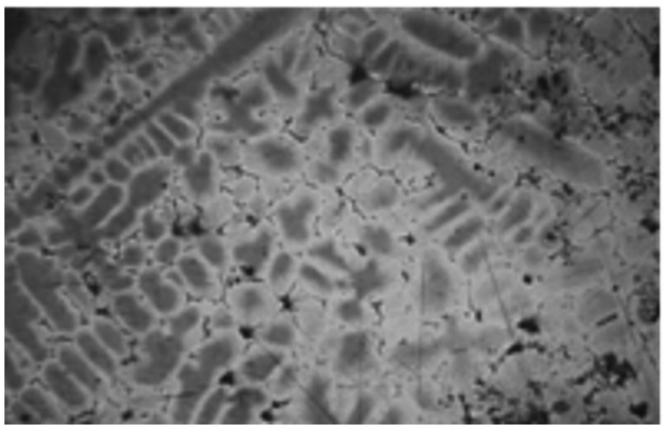

Fig. 2. Structure of cast steel 150H15N5VM, × 100

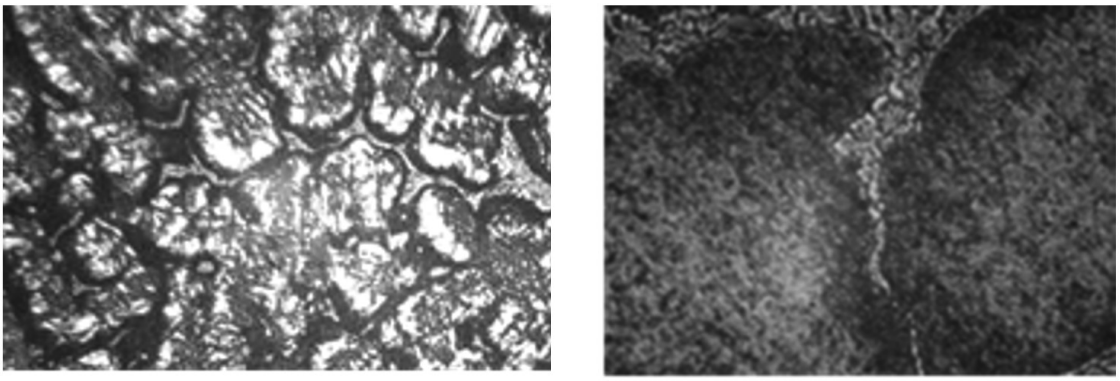

a, x200 *b*, x1000

Fig. 3. Morphology of the steel matrix after heat treatment: *a* – exposure at a temperature of 790 °C for 4 hours; *b* – exposure at a temperature of 830 °C for 1 hour

austenite with the formation of acicular structures. The obtained structure is the result of shear transformation of the austenite matrix into ferrite with the simultaneous formation of carbides, so it can be classified as a bainite type structure.

The development of the transformation depends on the exposure time. With exposure for one hour, the austenite decay process is not visually recorded, with an increase in exposure to two hours, the appearance of needle-like ferrite crystals in the central part of the austenite grains is noted, with a further increase in the exposure time, the decay process begins to cover areas close to the grain boundaries.

A further increase in the heating temperature to 790 °C does not lead to a change in the type of structure; it is formed by an austenitic-bainite matrix with the allocation of large eutectic carbides along the grain boundaries. Dispersed carbides are formed inside the grains, which are released during the transformation of austenite (Fig. 3*a*).

However, a further increase in the exposure temperature to 830 °C leads to a qualitative change in morphology. Even after relatively short exposure times (1 hour), the needle-like morphology in the alloy matrix disappears (Fig. 3*b*). This may be related to the development of recrystallization processes in ferrite, formed after the decay of austenite.

Structural changes during heat treatment are also accompanied by a change in the hardness of steel. Table 1 shows the values of microhardness of structure components, and Table 2 shows the hardness of steel after various treatment modes.

It can be seen from the given data that the process of austenite decay is accompanied by an increase in the

Table 1

Microhardness of the structural components of the studied steel, N/mm²

Structure component	Temperature of heating, ºC	
	750	790
Center of matrix grain	3210±230	3032±308
Near-boundary regions of matrix grain	4315±264	4720±361
Eutectic regions	4220±176	4290±324

Table 2

Hardness of steel after different heat treatment regimes

Temperature of heating, ºC	Hardness, HRC	
	Exposure time 1 hour	Exposure time 4 hour
550	34…38	--
650	37…39	--
750	36…38	46…48
790	37…40	44…46
830	36…39	39…43
900	32…33	--

Table 3

Hardness of steel after homogenization and subsequent hardening and tempering, HRC

Temperature of tempering, ºC	Temperature of quenching, ºC		
	950	**1025**	**1100**
Without tempering	59	59	49
550	36	38	38
650	31	30	31
750	40	39	44
850	50	47	46

hardness of the steel, while the microhardness of the eutectic component remains almost unchanged, and the change in total hardness is related to the processes occurring in the matrix.

Analysis of the effect of heating steel in the cast state showed that it is characterized by a fairly high stability of retained austenite and the hardness of steel in the entire temperature range remains low enough to be used as a material resistant to abrasive wear. Therefore, at the next stage of research, the samples were subjected to high-temperature homogenizing annealing followed by quenching in oil. Conducting high-temperature annealing affects the nature of the change in hardness during subsequent hardening and tempering. This is due to homogenization of the solid solution and a decrease in the degree of dendritic liquation. The dependence of hardness on the heat treatment regime is shown in Table 3.

The data show that homogenization leads to an increase in hardness during subsequent quenching from temperatures of 950 and 1025 °C. This is due to the fact that at these temperatures complete dissolution of carbide phases formed in the process of preliminary homogenization annealing does not occur. The degree of alloying of the solid solution at the heating temperature for quenching is relatively low, which leads to a fairly complete martensitic transformation. Increasing the quenching temperature to 1100 °C intensifies the processes of dissolution of carbides, which increases the stability of austenite and increases its content in the structure after quenching. This leads to a decrease in hardness.

The quenching temperature range of hardened steel studied in the paper was chosen based on the data obtained during the study of the influence of the heating temperature on the structure of the steel in the cast state. Data from table 2 and table 3 show that the tendency to increase hardness when heating the samples, previously subjected to quenching, in the temperature range of 750...850 °C, found in cast steel, remains. At the same time, the higher the quenching temperature, the lower the hardness, which may be associated with an increase in the stability of austenite and a slowdown in its decay during processing.

Thus, by changing the temperature of quenching and tempering, it is possible to change the hardness and structure state of steel within wide limits. However, not only the phase and structure composition changes, but also the properties of the structure components themselves. Therefore, in highly alloyed steels with increased austenite stability, the relationship between hardness and wear resistance is complex. The values of the relative wear resistance of samples hardened at temperatures of 950, 1025, and 1100 °C at different specific loads are shown in Tables 4...6, respectively. It can be seen from the tables that the maximum wear resistance is observed not only after quenching, but also after tempering at 850 °C, while the degree of manifestation of the effect depends on the specific load. This trend is even more pronounced when the temper temperature increases to 1100 °C. Table 5 shows that relative wear resistance firstly decreases with increasing tempering temperature, and then begins to increase. It also decreases with increasing specific load.

Table 4

Relative wear resistance of steel after homogenization and quenching from 950 ºC

Temperature of tempering, ºC	$\psi_{i,0}$	3,66 N/cm²	7,3 N/cm²	14,5 N/cm²
		$\psi_{i,0} = \frac{I_m^i - I_m^0}{I_m^0}.100$		
Without tempering	$\psi_{1,0}$	+44 %	+12 %	+17 %
550	$\psi_{11,0}$	+70 %	0 %	-32 %
650	$\psi_{12,0}$	-56 %	-64 %	-60 %
750	$\psi_{13,0}$	-47 %	-56 %	-51 %
850	$\psi_{14,0}$	-33 %	-44 %	-38 %

Table 5

Relative wear resistance of steel after homogenization and quenching from 1025 °C

Temperature of tempering, °C	$\psi_{i,0}$	3,66 N/cm²	7,3 N/cm²	14,5 N/cm²
		$\psi_{i,0} = \frac{I_m^i - I_m^0}{I_m^0}.100$		
Without tempering	$\psi_{2,0}$	+181 %	+41 %	+15 %
550	$\psi_{21,0}$	-16 %	-33 %	-36 %
650	$\psi_{22,0}$	-56 %	-65 %	-60 %
750	$\psi_{23,0}$	-48 %	-57 %	-53 %
850	$\psi_{24,0}$	+301 %	+7 %	-1 %

Table 6

Relative wear resistance of steel after homogenization and quenching from 1100 °C

Temperature of tempering, °C	$\psi_{i,0}$	3,66 N/cm²	7,3 N/cm²	14,5 N/cm²
		$\psi_{i,0} = \frac{I_m^i - I_m^0}{I_m^0}.100$		
Without tempering	$\psi_{3,0}$	+230 %	+49 %	+28 %
550	$\psi_{31,0}$	+60 %	-10 %	-22 %
650	$\psi_{32,0}$	-40 %	-54 %	-51 %
750	$\psi_{33,0}$	+181 %	+22 %	-11 %
850	$\psi_{34,0}$	+125 %	+19 %	-36 %

Additional information on the features of the influence of the structural state can be obtained from the analysis of the morphology of the wear surface. The research was carried out on the surface of the samples that passed the abrasive wear test with the maximum specific load. The microstructure of the tested samples is shown in Fig. 4.

The morphology of the wear surfaces is shown in Fig. 5. The research was carried out by the method of scanning electron microscopy on a JEOL 640 microscope in the mode of backscattered electrons, in which the contrast is created both due to the relief and due to the difference in the atomic numbers of the elements that form the material.

From the comparison of Figures 4 and 5, it can be seen that despite the significant difference in the microstructure of the samples, there is no direct relationship between the type of microstructure and the structure of the wear surface. The relationship between hardness and wear resistance is traced, which is quite trivial. At high specific loads, the main mechanism of destruction is microcutting of the surface of the sample by abrasive particles. The cutting marks pass through both the relatively soft matrix and the harder carbide eutectic without changing the geometry. Therefore, an increase in hardness leads to a more difficult cutting process and an increase in wear resistance. However, comparing the appearance of the surface of samples with maximum (Fig. 5 *a*, *b*, *c*) and minimum (Fig. 5 *d*, *e*, *f*) wear resistance, it can be concluded that with a decrease in resistance, in addition to relatively uniform cutting of the material, the depth of cutting abrasive particles penetration increases and the formation of destruction centers begins (Fig. 6).

It can be seen in Fig. 6*a* that during microcutting, when passing from the matrix to the area of carbide eutectic, the material retains integrity, while in a softer state, numerous fracture centers are formed on the traces of cutting (Fig. 6*b*). The mechanism of the appearance of fracture sites in a material with lower hardness, while the structural state with higher hardness does not lead to the appearance of local fracture foci, requires further research. However, it can be assumed that this is due to a sharp decrease in the strength limit of the matrix material due to the transformation of quenching structures during tempering.

Conclusions

High-chromium steel with the addition of nickel in the cast state has increased resistance of retained austenite. To obtain maximum hardness, cast steel should be heated in the temperature range of 740 ... 790 °C for 2 ... 4 hours. As a result of annealing and quenching with tempering, two variants of the structural state with increased wear resistance are formed – martensite and retained austenite immediately after quenching and the products of tempering of martensite and decay of retained austenite at high tempering.

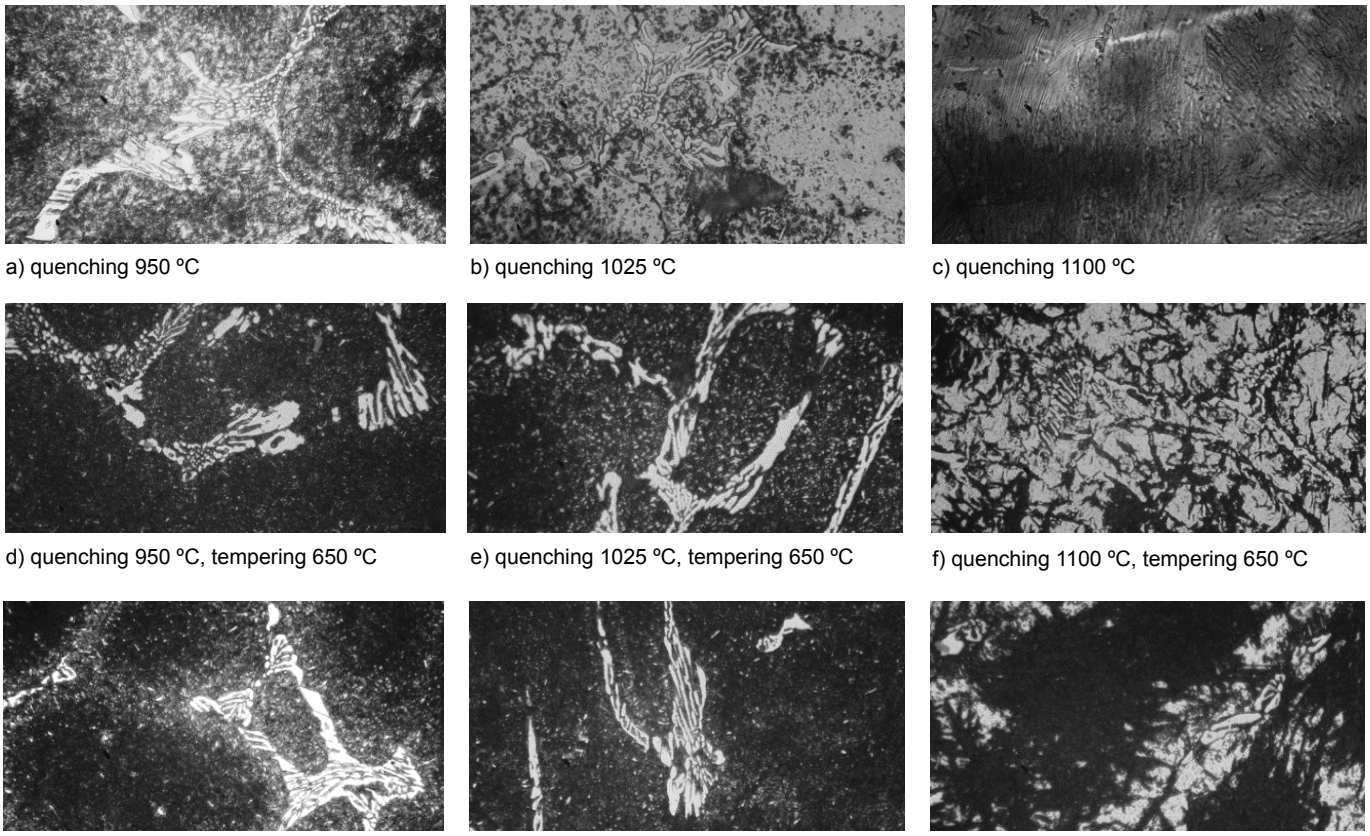

a) quenching 950 ºC

b) quenching 1025 ºC

c) quenching 1100 ºC

d) quenching 950 ºC, tempering 650 ºC

e) quenching 1025 ºC, tempering 650 ºC

f) quenching 1100 ºC, tempering 650 ºC

h) quenching 950 ºC, tempering 850 ºC

i) quenching 1025 ºC, tempering 850 ºC

j) quenching 1100 ºC, tempering 850 ºC

Fig. 4. Effect of hardening and tempering on the steel structure 150H15N5VM, ×1000

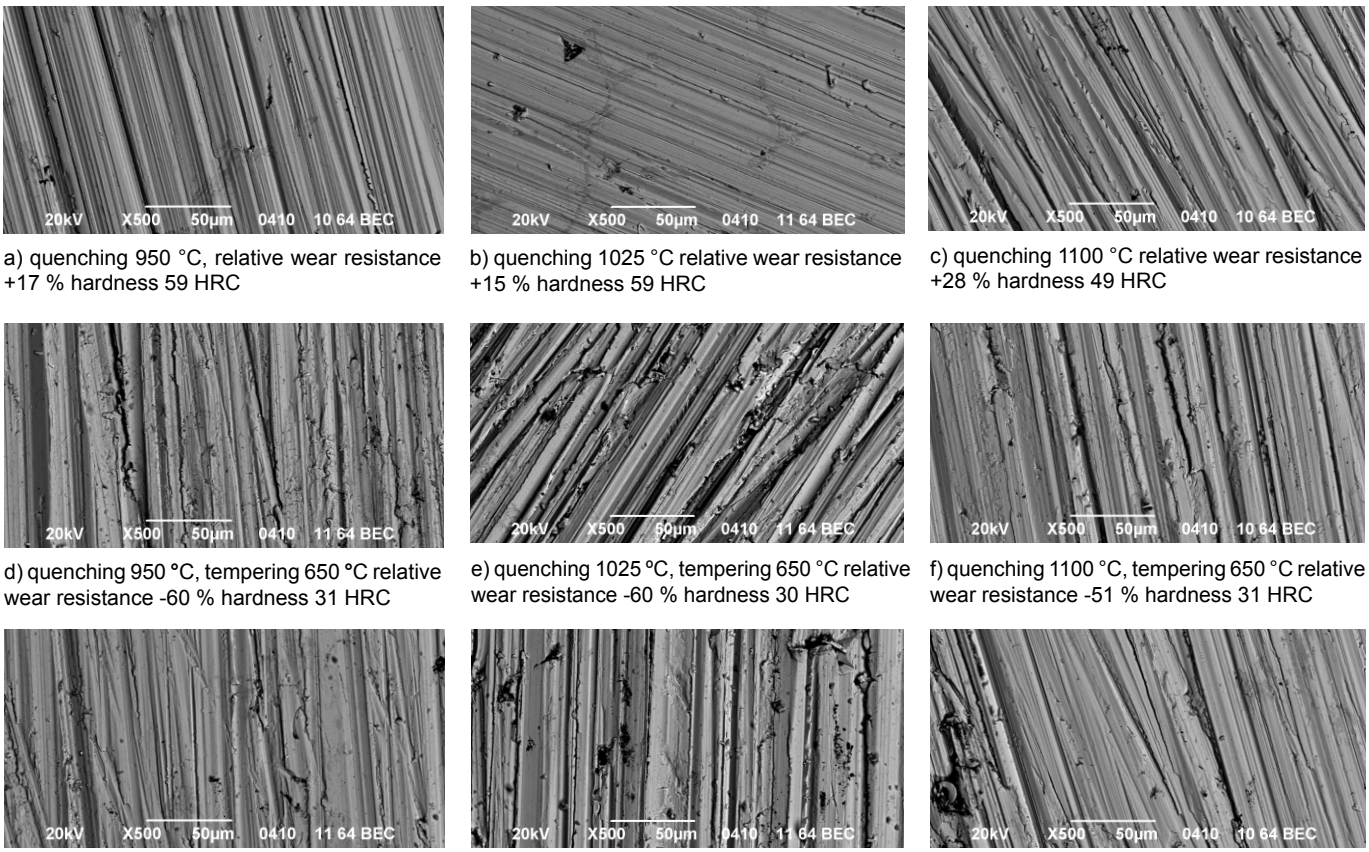

a) quenching 950 °C, relative wear resistance +17 % hardness 59 HRC

b) quenching 1025 °C relative wear resistance +15 % hardness 59 HRC

c) quenching 1100 °C relative wear resistance +28 % hardness 49 HRC

d) quenching 950 °C, tempering 650 °C relative wear resistance -60 % hardness 31 HRC

e) quenching 1025 °C, tempering 650 °C relative wear resistance -60 % hardness 30 HRC

f) quenching 1100 °C, tempering 650 °C relative wear resistance -51 % hardness 31 HRC

h) quenching 950 °C, tempering 850 °C relative wear resistance -38 % hardness 50 HRC

i) quenching 1025 °C, tempering 850 °C relative wear resistance -1 % hardness 47 HRC

j) quenching 1100 °C, tempering 850 °C relative wear resistance -36 % hardness 46 HRC

Fig. 5. The influence of quenching and tempering on the morphology of the wear surface of steel 150H15N5VM, ×500

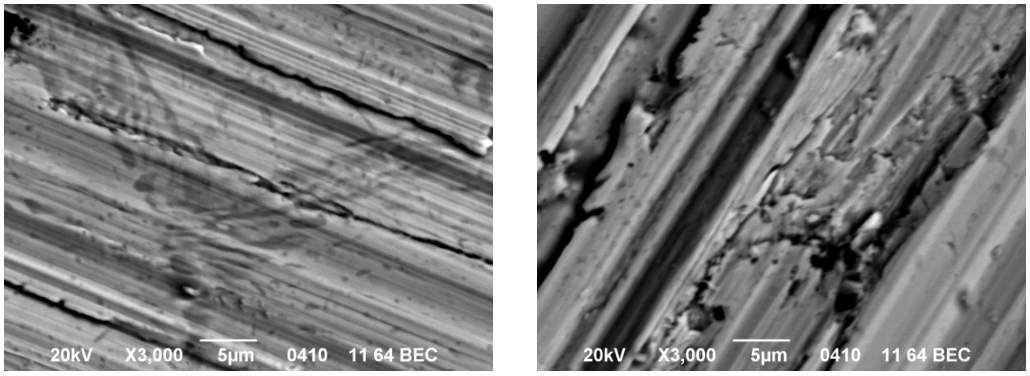

a) quenching 1025 ºC relative wear resistance +15 % hardness 59 HRC

b) quenching 1025 °C, tempering 650 °C relative wear resistance -60 % hardness 30 HRC

Fig. 6. Changes in the morphology of the wear surface of steel 150H15N5VM with a decrease in hardness and wear resistance, ×3000

After high-temperature annealing and following quenching at temperatures in the range of 950...1100 °C, the hardness of the steel increases compared to the cast state. Wear resistance increases as the quenching temperature increases, but as the specific load increases, the degree of increase in wear resistance decreases.

Tempering of steel in the temperature range of 550...650 °C leads to a sharp drop in wear resistance, which is accompanied by changes in the micromechanism of the wear surface destruction – the appearance of fracture centers. At the same time, the degree of influence of the structural state on the wear resistance increases with a decrease in the specific load during abrasive wear.

A significant increase in wear resistance with a further increase in tempering temperature, especially at low specific loads, can be explained by the formation of special carbides of alloying elements in the matrix, but this mechanism requires further research.

ЛІТЕРАТУРА

1. Гарбер М.Е. Износостойкие белые чугуны: свойства, структура, технология, эксплуатация. Москва: Машиностроение, 2010. 280 с.
2. Марукович Е.И., Карпенко М.И. Износостойкие сплавы. Москва: Машиностроение, 2005. 428 с.
3. Виноградов Г.Н., Сорокин Г.М. Износостойкость сталей и сплавов. Москва: Нефть и газ, 1994. 417 с.
4. Цыпин И.И. Износостойкие отливки из белых легированных чугунов. Москва: НИИМаш, 1983. 56 с.
5. Колокольцев В.М. (ред.), Мулявко Н.М., Вдовин К.Н., Синицкий Е.В. Абразивная износостойкость литых металлов и сплавов. Магнитогорск: МГТУ, 2004. 228 с.
6. Ki Chang Bae, Dohyung Kim, Yong Hwan Kim et al. Effect of heat treatment, building direction, and sliding velocity on wear behavior of selectively laser-melted maraging 18Ni-300 steel against bearing steel. *Wear*. Vols 482–483. 15 October 2021. 203962. DOI: https://doi.org/10.1016/J.WEAR.2021.203962
7. Yanliang Yi, Qiang Li, Shaolei Long, Zhen Lv, Shuangjian Li, Yangzhen Liu, Baochao Zheng, Wei Li. Effect of matrix microstructure on the matrix/M_2B wear interaction and its quantitative characterization in an Fe-2wt%B alloy. *Wear*. Vols 472–473. 15 May 2021. 203608. DOI: https://doi.org/10.1016/j.wear.2020.203608
8. Xincheng Yan, Jun Hu, Hao Yu, Chenchong Wang, Wei Xu. Unraveling the significant role of retained austenite on the dry sliding wear behavior of medium manganese steel. *Wear*. Vol. 476. 15 July 2021. 203745. DOI: https://doi.org/10.1016/j.wear.2021.203745
9. Sunil Kumar, Saikat Ranjan Maity, Lokeswar Patnaik. A comparative study on wear behaviors of hot work and cold work tool steel with same hardness under dry sliding tribological test. *Materials Today: Proceedings*. 2021. Vol. 44. Part 1. P. 949–954. DOI: https://doi.org/10.1016/j.matpr.2020.11.004
10. Ibrahim Orhun Tugay, Ali Hosseinzadeh, Guney Guven Yapici. Hardness and wear resistance of roller burnished 316L stainless steel. *Materials Today: Proceedings*. 2021. Vol. 47. Part 10. P. 2405–2409. DOI: https://doi.org/10.1016/j.matpr.2021.04.363
11. Jayanta Mondal, Karabi Das, Siddhartha Das. An investigation of mechanical property and sliding wear behaviour of 400Hv grade martensitic steels. *Wear*. Vols 458–459. 15 October 2020. 203436. DOI: https://doi.org/10.1016/j.wear.2020.203436
12. Oscar Ríos-Diez, Ricardo Aristizábal-Sierra, Claudia Serna-Giraldo et al. Wear behavior of nanostructured carbo-austempered cast steels under rolling-sliding conditions. *Journal of Materials Research and Technology*. Vol. 11. March–April 2021. P. 1343–1355. DOI: https://doi.org/10.1016/j.jmrt.2021.01.094

13. Fernández-Valdés D., Meneses-Amador A., López-Liévano A., Ocampo-Ramírez A. Sliding wear analysis in borided AISI 316L steels. *Materials Letters*. Vol. 285. 15 February 2021. 129138. DOI: https://doi.org/10.1016/j.matlet.2020.129138
14. Quanshun Luo, Jianbin Li, Qintai Yan, Wenbo Li, Yubi Gao, Matthew Kitchen, Leon Bowen, Nicholas Farmilo, Yutian Ding. Sliding wear of medium-carbon bainitic/martensitic/austenitic steel treated by short-term low-temperature austempering. *Wear*. Vol. 476. 15 July 2021. 203732. DOI: https://doi.org/10.1016/j.wear.2021.203732
15. Dhokey N.B., Maske S.S., Ghosh P. Effect of tempering and cryogenic treatment on wear and mechanical properties of hot work tool steel (H13). *Materials Today: Proceedings*. 2021. Vol. 43. Part 5. P. 3006–3013. DOI: https://doi.org/10.1016/j.matpr.2021.01.361

Надійшла 31.01.2023

REFERENCES

1. Garber, M.E. (2010). Wear resistant white irons: properties, structure, technology, exploitation. Moscow: Mashinostroenie, 280 p. [in Russian].
2. Marukovych, E.I., Karpenko, M.I. (2005). Wear resistant alloys. Moscow: Mashinostroenie, 428 p. [in Russian].
3. Vinogradov, G.N., Sorokin, G.M. (1994). Wear resistance of steels and alloys. Moscow: Neft' i gaz, 417 p. [in Russian].
4. Tsypin, I.I. (1983). Wear resistant casting from white alloyed irons. Moscow: NIIMash, 56 p. [in Russian].
5. Kolokoltsev, V.M., Mulyavko, N.M., Vdovyn, K.N., Synytsyn, E.V. (2004). Abrasive wear resistance of cast metal and alloys. Under edition of V.M. Kolokoltsev. Magnytogorsk: MGTU, 228 p. [in Russian].
6. Ki Chang Bae, Dohyung Kim, Yong Hwan Kim et al. (2021). Effect of heat treatment, building direction, and sliding velocity on wear behavior of selectively laser-melted maraging 18Ni-300 steel against bearing steel. *Wear*, vols 482–483, 203962, doi: https://doi.org/10.1016/J.WEAR.2021.203962
7. Yanliang Yi, Qiang Li, Shaolei Long, Zhen Lv, Shuangjian Li, Yangzhen Liu, Baochao Zheng, Wei Li (2021). Effect of matrix microstructure on the matrix/M_2B wear interaction and its quantitative characterization in an Fe-2wt%B alloy. *Wear*, vols 472–473, 203608, doi: https://doi.org/10.1016/j.wear.2020.203608
8. Xincheng Yan, Jun Hu, Hao Yu, Chenchong Wang, Wei Xu (2021). Unraveling the significant role of retained austenite on the dry sliding wear behavior of medium manganese steel. *Wear*, vol. 476, 203745, doi: https://doi.org/10.1016/j.wear.2021.203745
9. Sunil Kumar, Saikat Ranjan Maity, Lokeswar Patnaik (2021). A comparative study on wear behaviors of hot work and cold work tool steel with same hardness under dry sliding tribological test. *Materials Today: Proceedings*, vol. 44, part 1, pp. 949–954, doi: https://doi.org/10.1016/j.matpr.2020.11.004
10. Ibrahim Orhun Tugay, Ali Hosseinzadeh, Guney Guven Yapici (2021). Hardness and wear resistance of roller burnished 316L stainless steel. *Materials Today: Proceedings*, vol. 47, part 10, pp. 2405–2409, doi: https://doi.org/10.1016/j.matpr.2021.04.363
11. Jayanta Mondal, Karabi Das, Siddhartha Das (2020). An investigation of mechanical property and sliding wear behaviour of 400Hv grade martensitic steels. *Wear*, vols 458–459, 203436, doi: https://doi.org/10.1016/j.wear.2020.203436
12. Oscar Ríos-Diez, Ricardo Aristizábal-Sierra, Claudia Serna-Giraldo et al. (2021). Wear behavior of nanostructured carbo-austempered cast steels under rolling-sliding conditions. *Journal of Materials Research and Technology*, vol. 11, pp. 1343–1355, doi: https://doi.org/10.1016/j.jmrt.2021.01.094
13. Fernández-Valdés, D., Meneses-Amador, A., López-Liévano, A., Ocampo-Ramírez, A. (2021). Sliding wear analysis in borided AISI 316L steels. *Materials Letters*, vol. 285, 129138, doi: https://doi.org/10.1016/j.matlet.2020.129138
14. Quanshun Luo, Jianbin Li, Qintai Yan, Wenbo Li, Yubi Gao, Matthew Kitchen, Leon Bowen, Nicholas Farmilo, Yutian Ding (2021). Sliding wear of medium-carbon bainitic/martensitic/austenitic steel treated by short-term low-temperature austempering. *Wear*, vol. 476, 203732, doi: https://doi.org/10.1016/j.wear.2021.203732
15. Dhokey, N.B., Maske, S.S., Ghosh, P. (2021). Effect of tempering and cryogenic treatment on wear and mechanical properties of hot work tool steel (H13). *Materials Today: Proceedings*, vol. 43, part 5, pp. 3006–3013, doi: https://doi.org/10.1016/j.matpr.2021.01.361

Received 31.01.2023

Анотація

В.В. Пашинський, д-р техн. наук, доц., зав. кафедри,
e-mail: v.v.pashinskiy@mipolytech.education,
https://orcid.org/0000-0003-0118-4748, Web of Science
ResearcherID: AAW-3826-2020
О.Г. Пашинська, д-р техн. наук, ст. наук. співр., проф. кафедри,
e-mail: E.G.Pashinskaya@mipolytech.education,
https://orcid.org/0000-0001-7102-1544, Web of Science
ResearcherID: AAE-5739-2021
І.О. Бойко, канд. техн. наук, доц. кафедри,
e-mail: igor.boyko@mipolytech.education,
https://orcid.org/0000-0001-7742-4694

Технічний Університет «Метінвест Політехніка» (Запоріжжя, Україна)

Вплив термічної обробки на структуру та зносостійкість при абразивному зношуванні високовуглецевої хромонікелевої сталі типу 150Х15Н5ВМ

Статтю присвячено вдосконаленню режимів термообробки сталі типу 150Х15Н5ВМ для забезпечення необхідних експлуатаційних характеристик інструменту. Зносостійкість сплавів при абразивному зношуванні досліджували методом тертя об закріплений абразив. Формування різного структурного стану виконувалося шляхом відпалу литої сталі при температурах 550–900 °С, а також гартуванням від температур 950–1100 °С з наступним відпуском в інтервалі 550–850 °С. Структуру сталі досліджували методами оптичної металографії, морфологію поверхонь зношування – методами растрової електронної мікроскопії.

В результаті досліджень встановлено, що високохромиста сталь з добавкою нікелю в литому стані має підвищену стійкість залишкового аустеніту. Для отримання максимальної твердості литу сталь слід піддавати нагріванню в інтервалі температур 740 … 790 °С протягом 2 … 4 годин. В результаті відпалу і загартування з відпуском формуються два варіанти структурного стану з підвищеною зносостійкістю – мартенсит і залишковий аустеніт безпосередньо після гарту і продукти відпуску мартенситу і розпаду залишкового аустеніту при високому відпуску. Зносостійкість зростає з підвищенням температури гартування. Основним механізмом зношування є мікрорізання поверхні твердими абразивними частками. Падіння зносостійкості при температурах відпуску 550–650 °С є наслідком зниження твердості і супроводжується змінами у мікромеханізмі руйнування поверхні зношування – появі локальних осередків руйнування. Значне зростання зносостійкості при подальшому підвищенні температури відпуску, особливо при невеликих питомих навантаженнях, може пояснюватися формуванням в матриці спеціальних карбідів легуючих елементів.

Ключові слова

Абразивне зношування, високовуглецева хромонікелева сталь, відпал, гартування, відпуск, зносостійкість, питоме навантаження, спеціальні карбіди.